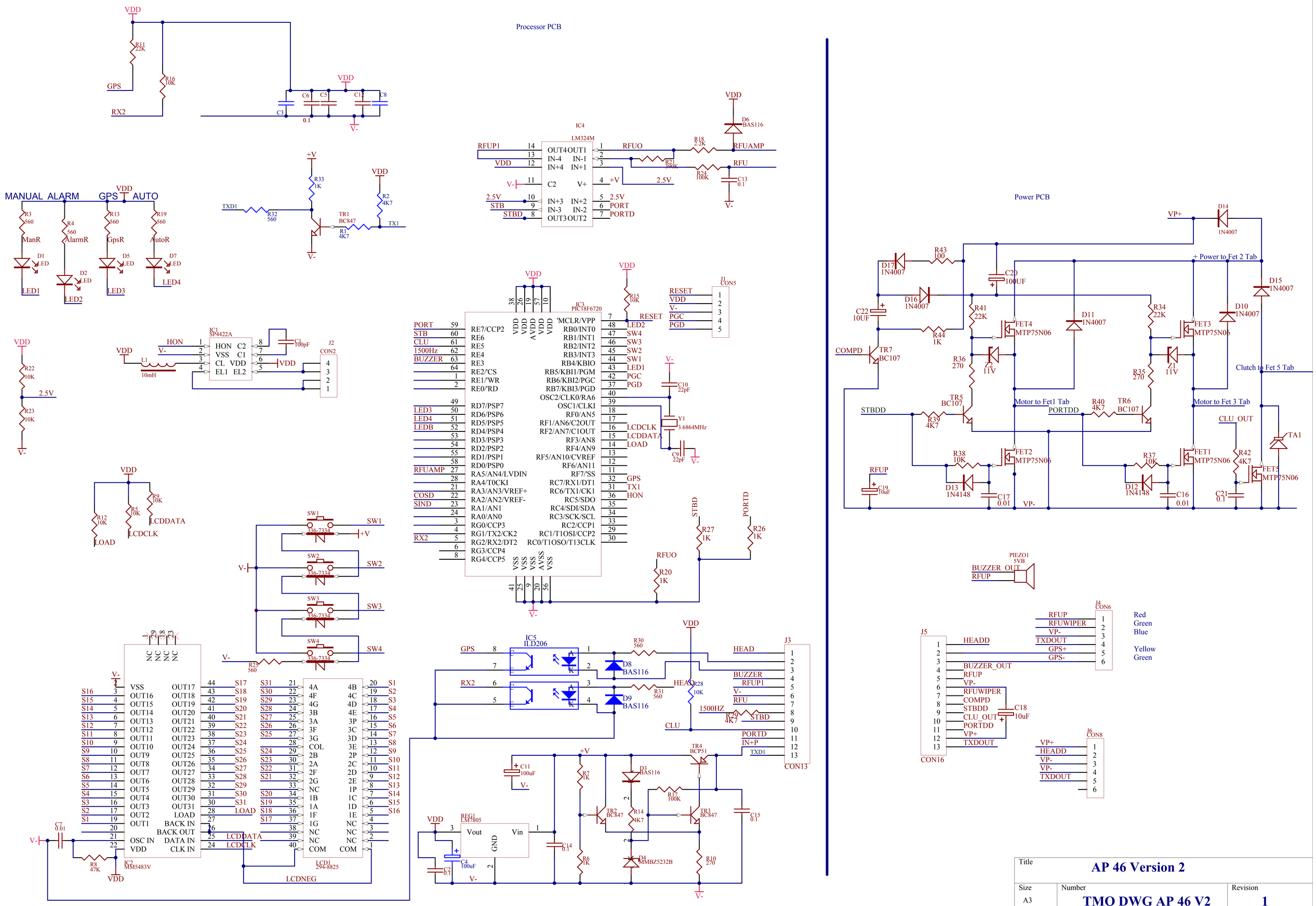
Processor PCB
Power PCB
MANUAL ALARM GPS AUTO
ManR
AlarmR
GpsR
AutoR
LED1
LED2
LED3
LED4
IC1 SP4422A
IC2 MM5483V
IC3 PIC18F6720
IC4 LM324M
IC5 ILD206
LCD1 294-8825
REG1 LM7805
J1 CON5
J2 CON2
J3 CON13
J4 CON6
J5 CON16
J6 CON8
PIEZO1 5VB
TA1
Clutch to Fet 5 Tab
Motor to Fet1 Tab
Motor to Fet 3 Tab
+ Power to Fet 2 Tab
VP+
VP-
RFUP
RFUWIPER
TXDOUT
GPS+
GPS-
Red
Green
Blue
Yellow
Green
Title
AP 46 Version 2
Size
A3
Number
TMQ DWG AP 46 V2
Revision
1
Date: 06/06/2008
Sheet of
File: D:\newpcb\AP46EL\Documents\AP46EL.SCH
Drawn By:
RW